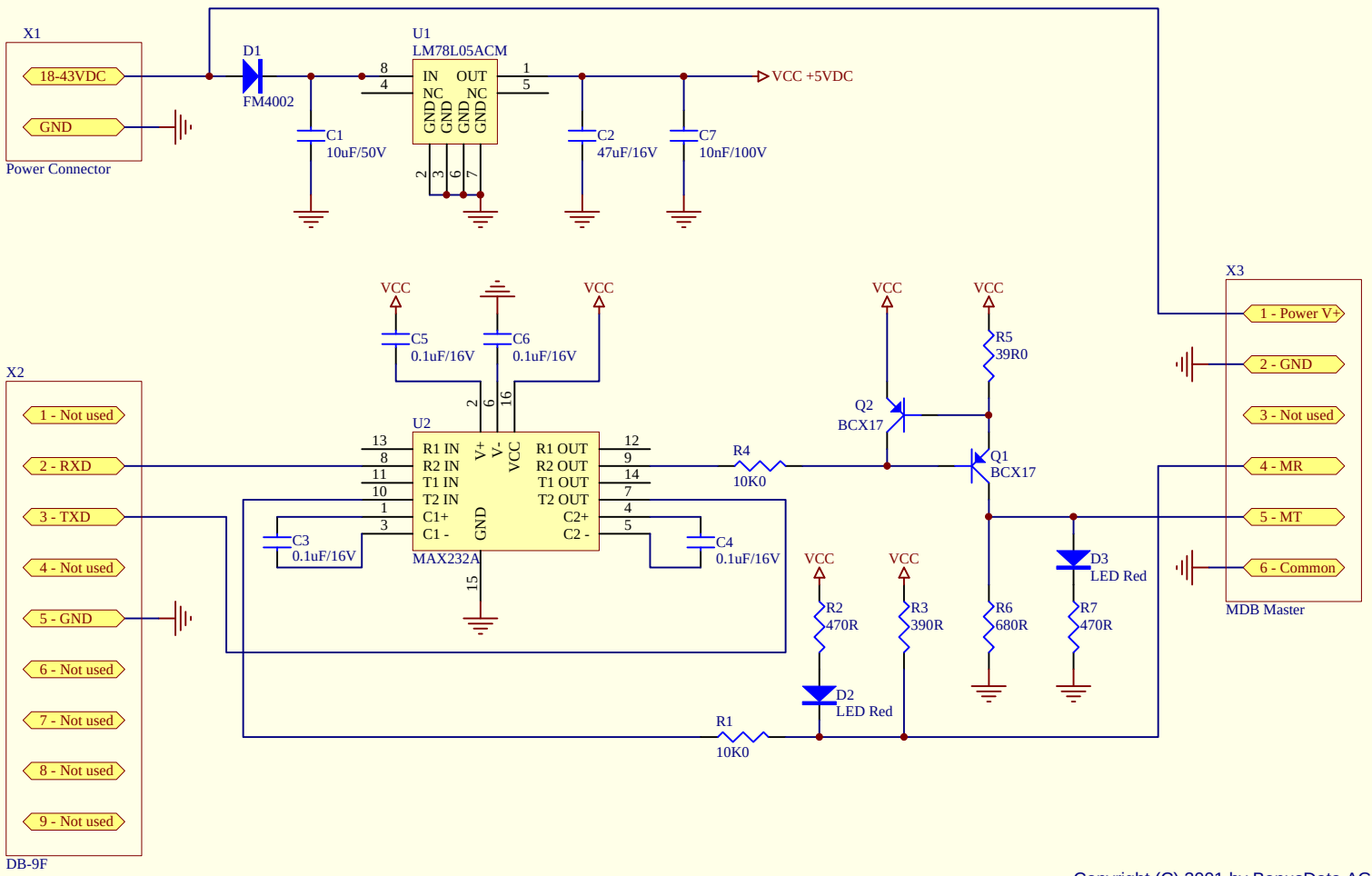

Copyright (C) 2001 by BonusData AG

Title	RS-232C to MDB master interface cable	
Size A4	Number 1-6-1	Revision 1.00
Date: 3-Aug-2001		Sheet of
File: E:\BonusData\Article\1-6-1\1-6-1.Sch		Drawn By: Anton Kappeler